FT520 Batch Flow Processor Instructions

General Information

The FT520 is a batching flow processor with additional output features. It is designed for use with SeaMetrics flow meters and flow sensors, as well as other units which have frequency output proportional to flow. In addition to batch function, the FT520 indicates flow rate and accumulated total in large digits on an easily-read backlit display. Units are user selectable, and range from milliliters per second to million gallons per day.

Batch output is controlled by two relays. The main relay starts and stops the batch as a set. The auxiliary "prewarn" relay can be used to operate a second valve, in order to have a staged shut off at the end of the batch, for maximum accuracy.

Analog output (4-20 mA, 0-10 VDC) is included for applications requiring it, such as flow rate logging. Two programmable pulse outputs are also standard, and can be used, for example, to provide proportional chemical feed with a pulse-responsive metering pump.

Specifications

Power	115/220 VAC, 50/60 Hz, 12-24 VDC
Temperature	32° - 130° F (0° - 55° C)
Enclosure	Precision cast aluminum, NEMA 4X
Batch Outputs	Two Form C SPDT relay, 115 VAC 5A max
Max Pulse Output	100 mA at 60 VDC
Memory Type	Non-volatile EEPROM auto-backup
Sensor Power	12 VDC, 10 mA
Totalizer	8 digit
Rate Display	5 digit
Volume Units	Gallons, cubic feet, cubic meters, liters, million gallons
Time Units	Seconds, minutes, hours, days
Analog Output	4-20 mA, 0-10 VDC, opto-isolated
Sensor Input	Open collector current sink, ESD protected
Max Input Frequency	1,000 Hz
Shipping Weight	7 lbs

Features

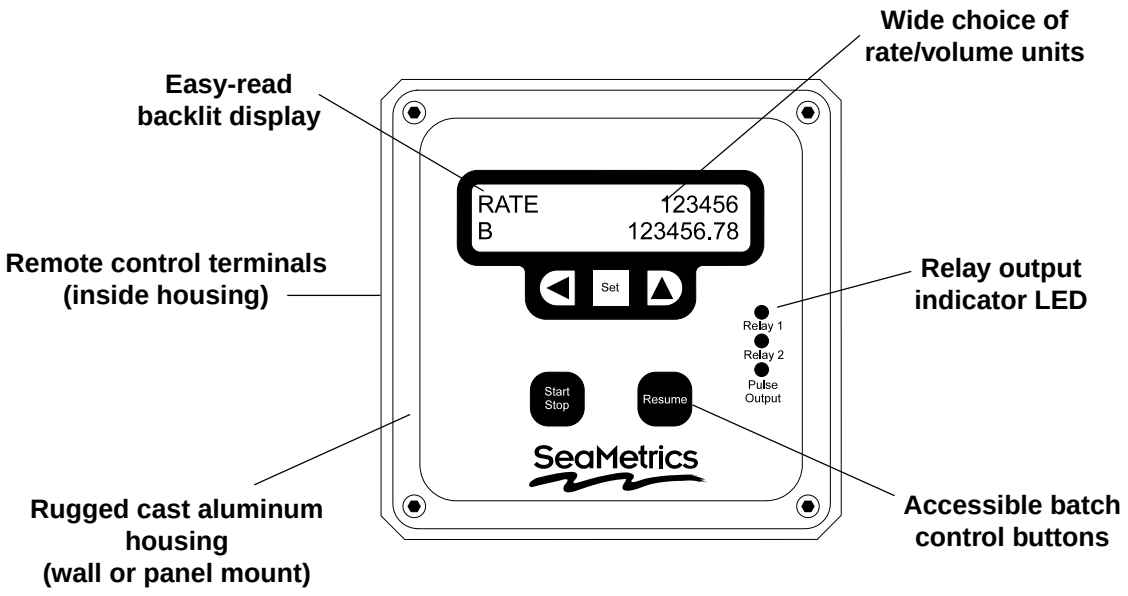

Installation

Wall Mounting. Using the eight screws provided, attach the two foot brackets to the sides of the enclosure. Then attach the unit to any secure surface by inserting screws through the mounting holes in the foot brackets.

Panel Mounting. Follow the dimensions for "Panel Cutout" to cut a hole in the panel. Slide the panel mount gasket up from the bottom of the enclosure to its place behind the panel mount flange. Insert the unit through the panel cutout. Install the two panel mount brackets on the sides of the unit using the eight screws provided. Each bracket has one threaded center hole. Insert and tighten one screw in each hole, until the flange is pulled firmly up against the panel and the gasket is compressed.

Expose Terminals. Remove the four screws which hold the front plate to its flange. Remove the front plate. The display board is attached to this front plate. It is also connected to the power board by a ribbon cable. For convenience, this cable can be disconnected, or the display board can be allowed to dangle while making connections. Connections can be made inside the enclosure, or the terminals can be unplugged for easier access, by gently tugging on them.

Caution: When the control is powered up, relay or analog outputs may be present. If this could be a hazard, wait to make external connections until programming is complete.

Sensor Connection. Follow the "Connections" diagram to connect either two or three wires from the flow meter or flow sensor.

Batch Control Connection. Connect the valve or other device(s) to be controlled for starting and stopping the batch to the appropriate relay terminals. Note: if the staged shutoff ("prewarn") will not be used, connect to relay one only. Relay 1 remains energized for the entire batch cycle. If a staged shutoff is desired, connect the main valve to Relay 2 (early shutoff) and the low-flow valve to Relay 1.

Power Connection. Connect AC or DC power as desired to the appropriate terminals. For safety, if using AC power, be sure to connect the ground terminal provided to a good earth ground.

Replace the front panel, taking care to reconnect the ribbon cable if it has been disconnected. When power is switched on, the display should light up immediately with meaningful letters or digits.

Displays

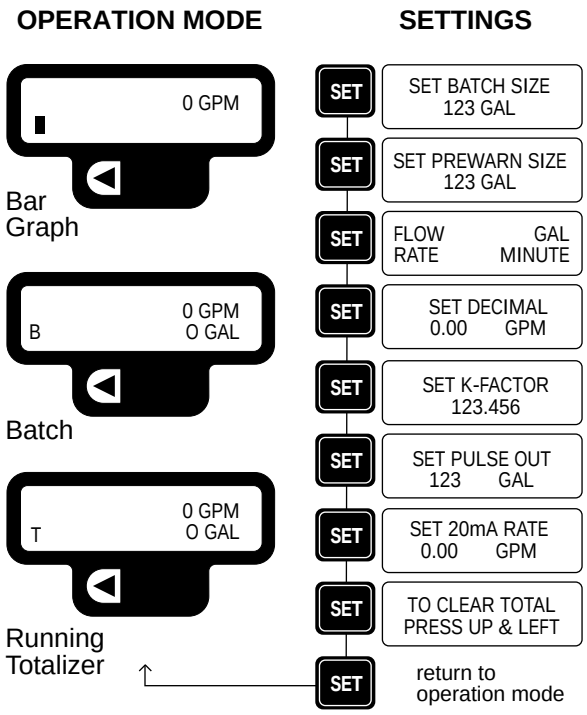

Settings

Batch Setting. These functions are covered under operation. When first setting up the FT520, skip down to **Flow Rate** and **K-Factor**, which must be set before batching can be done.

Set Flow Rate. Use ▲ to select volume units. Use ◀ to select the particular unit desired (gallons, liters, etc.). Then use ▲ to switch to time units. Again, select the one desired.

Set Decimal. Use ◀ to select zero, one, or two decimal places on the flow units.

Set K-Factor. The unit will not function properly until this number is entered. It is simply the number of pulses which the flow meter or flow sensor puts out per gallon of liquid. It is marked on the Model/Serial tag of SeaMetrics flow meters and flow sensor fittings. On adjustable flow sensors, the K-factor must be taken from

the chart in the flow sensor instructions, based on pipe size. Set the number with ◀ ▲ keys. The digit which is underlined is the one being set. The ◀ moves one digit to the left. The ▲ increases the digit. When the appropriate number has been set, press SET again to move on to the next menu item.

Set Pulse Out. An output pulse is activated at the selected volume intervals if this feature is in use. Otherwise, it does not need to be set.

Set 20 mA Out. A 4-20 mA analog output is standard on this unit. If a 4-20 mA current loop is connected, set the flow rate, in the desired units, at which the peak 20 mA is desired. The controller will automatically scale the 4 mA output to zero flow.

Clear Total. This function resets the running total back to zero. It is unrelated to the regeneration function, and can be ignored unless it is needed. To reset to zero, press ▲ and ◀ simultaneously, as instructed.

Operation

Set Batch Size. Set the batch size for the desired number of units, using ◀ and ▲ keys. If the staged shut-off feature is not being used, this is the only setting required for the batch.

Set Prewarn. This is only used for a staged shut-off. The number set is the number of units early (before the end of the batch) that Relay 2 will shut off.

Start Batch. Pressing the Start/Stop key starts the batch by energizing Relay 1. The indicator for Relay 1 will light, indicating normal operation. The indicator for Relay 2 may also light, depending on the prewarn setting. If staged shut-off is being used, the Relay 2 indicator light should go out before the end of the batch, at the prewarn set point.

The batch will continue on to the set amount unless it is halted in the middle by pressing the Start/Stop key again.

Connections

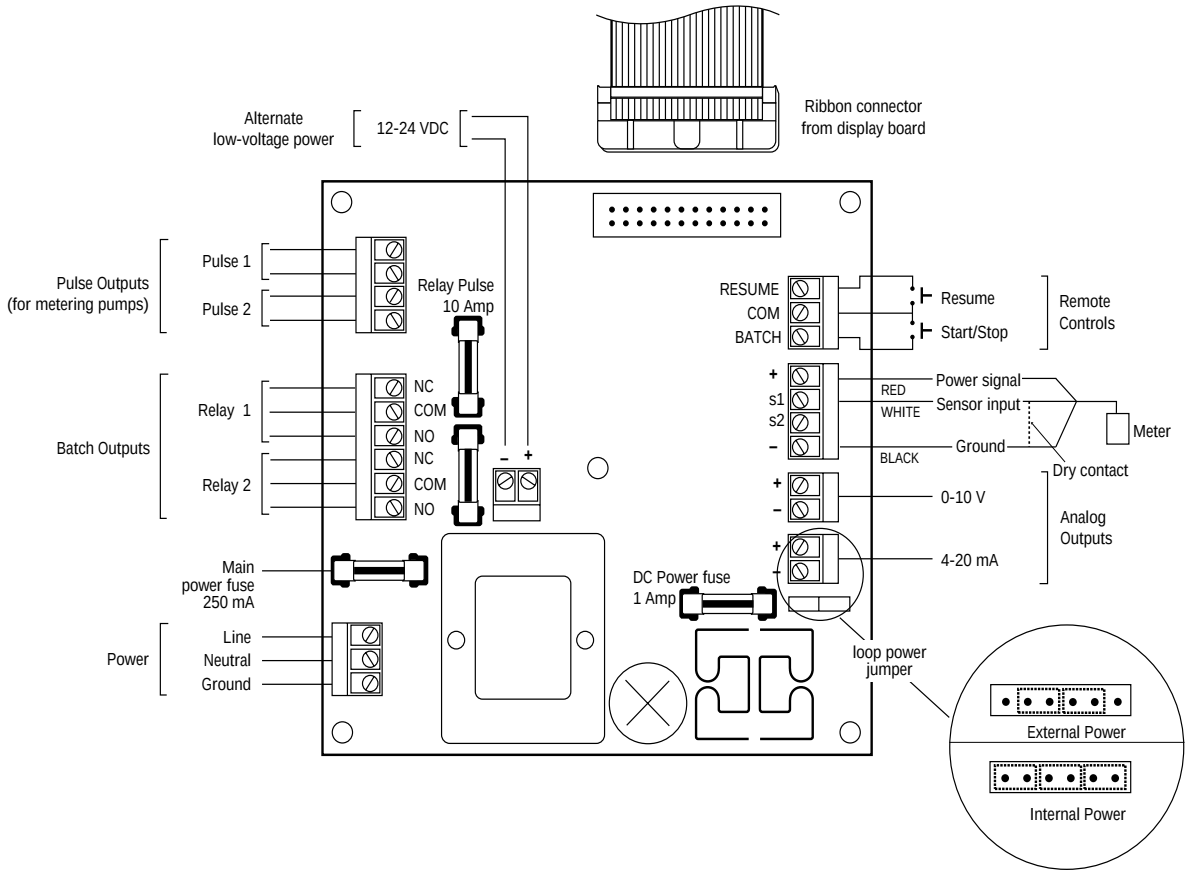

Stop Batch/Resume Batch. Pressing the Start/Stop key anywhere in the batch will stop it. It will remain stopped until the Resume key is pressed. Pressing the Resume key allows the batch to restart and go through to the end.

Choice of Displays for Batching. When in Operation Mode, press ◀ to change the type of display. Running Totalizer ("T") accumulates a Total Flow until it is reset. Batch ("B") accumulates the flow of the present batch only, then resets. Bar Graph ("▮") graphically indicates from left to right, how much of the batch has already accumulated.

Repair

The only field-repairable component on the FT520 is the fuse. If failure is due to a cause other than a blown fuse, it is necessary to replace the entire board stack. Contact your distributor for information.

Caution: Always disconnect power to the unit before opening the terminal cover. Do not reconnect power until all connections have been made and the terminal cover has been replaced.

Fuses. The power supply and the analog output circuit have fuse protection. The two fuses are on the board. Replace the blown power fuse with a 250 mA, 5x20 mm glass fuse, available from SeaMetrics or from Radio Shack (or other electronic supply store). The DC power fuse is a 1 Amp, 5x20 mm glass fuse.

Panel cut-out dimensions

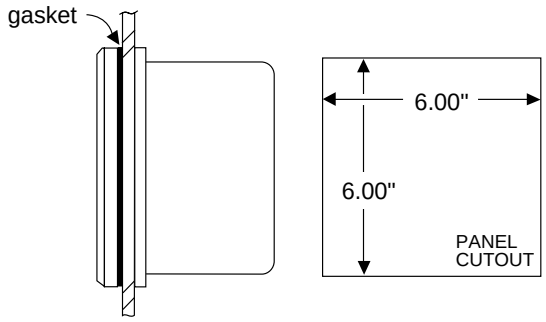

Staged Shut-off Application

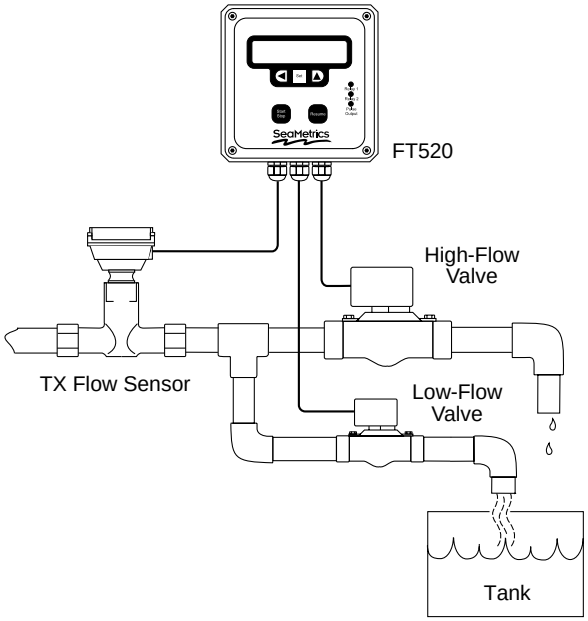

Connection for Staged Shut-off

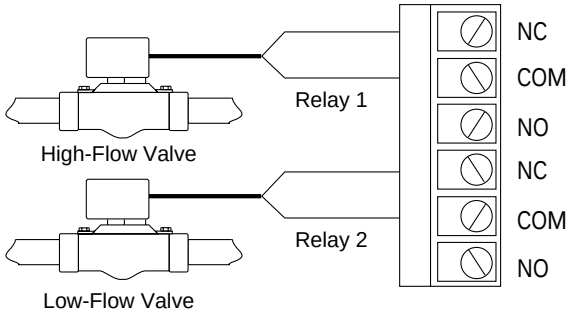

SeaMetrics
20419 80th Ave. So., Kent, WA 98032 USA
Phone: 253-872-0284 Fax: 253-872-0285
www.seametrics.com 1-800-975-8153